ISSN 2395-1621

Analysis and Optimisation of Crankshaft

#1Mr. S. M. Nagare, #2ProfP.N.Narwade

1sachin.nagare88@gmail.com

Department of Mechanical Engg, DPVVP COE, Vilatghat,
SavitribaiPhule Pune University

ABSTRACT

Crankshaft is one of the critical components for the effective and precise working of Inernal Combustion Engine The modal analysis of a 6-cylinder crankshaft is discussed using finite element method in this paper.. Three-dimension models of diesel engine crankshaft was created using SOLID WORKS software. The finite element analysis (FEM) software ABAQUS was used to analyze the vibration modal of the crankshaft. The maximum stress point and dangerous areas are found by the deformation analysis of crankshaft. We compared result of theoretical ,FEA & experimental . The results would provide a valuable theoretical foundation for the optimization and improvement of engine design

Keywords- **Finite Element Analysis, ProE, ANSYS, Crankshaft, stress analysis**

ARTICLE INFO

Article History

Received :28th Septmber 2015

Received in revised form :

1st October 2015

Accepted : 5thOctober , 2015

Published online :

6th October 2015

I. INTRODUCTION

Crankshaft is one of the most important moving parts in internal combustion engine. It must be strong enough to take the downward force of the power stroked without excessive bending. So the reliability and life of internal combustion engine depend on the strength of the crankshaft largely. And as the engine runs, the power impulses hit the crankshaft in one place and then another. The torsional vibration appears when a power impulse hits a crankpin toward the front of the engine and the power stroke ends. If not controlled , it can break the crankshaft. Strength calculation of crankshaft becomes a key factor to ensure the life of engine. Beam and space frame model were used to calculate the stress of crankshaft usually in the past. But the number of node is limited in these models. With the development of computer, more and more design of crankshaft has been utilized finite element method (FME) to calculate the stress of crankshaft. The application of numerical simulation for the designing crankshaft helped engineers to efficiently improve the process development avoiding the cost and limitations of compiling a database of real world parts. Finite element analysis allows an inexpensive study of arbitrary combinations of input parameters including design parameters and process conditions to be investigated. Crankshaft is a complicated continuous structure. The vibration performance of crankshaft has important effect to engine [9].

II. LITERATURE REVIEW

1. Evaluation of FEM based fracture mechanics technique to estimate life of an automotive forged steel crankshaft of a single cylinder diesel engine
Rajesh M .Metkar et al (2013) [1]
Crankshaft is one of the critical components of an IC engine, failure of which may result in disaster and makes engine useless unless costly repair performed. It possesses intricate geometry and while operation experiences complex loading pattern. In IC engines, the transient load of cylinder gas pressure is transmitted to crankshaft through connecting rod, which is dynamic in nature with respect to magnitude and direction. However, the piston along with connecting rod and crankshaft illustrate respective reciprocating and rotating system of components. the dynamic load and rotating system exerts repeated bending and shear stress due to torsion, which are common stresses acting on crankshaft and mostly responsible for crankshaft fatigue failure. Hence, fatigue strength and life assessment plays an important role

in crankshaft development considering its safety and reliable operation. The present paper is based on comparative studies of two methods of fatigue life assessment of a single cylinder diesel engine crankshaft by using fracture mechanics approach viz. linear elastic fracture mechanics (LEFM) and recently developed critical distance approach (CDA). These methods predict crack growth, time required for failure and other parameters essential in life assessment. LEFM is an analytical method based on stress intensity factor which characteristics the stress distribution in the vicinity of crack tip, whereas CDA is a group of methods predicts failure using stress distance plot. The maximum stress value required for both the methods are obtained using finite element analysis based commercial software known as ABAQUS. The present paper provides an insight of LEFM and CDA methods along with its benefits to the designers to correctly assess the life of crankshaft at early stage of design. This paper also gives a detailed overview of failure analysis process including theoretical methods and result integration for predicting life of components as compared to life estimation by means of software. [1]

2. Modeling and Experimental Analysis of the Aluminum Alloy Fatigue Damage in the case of Bending – Torsion Loading[2]

Milan Saga et al (2012)

The article deals with determining of fatigue lifetime of structural materials during by multi axial cyclic loading .The theoretical part focuses on fatigue and criterions for evaluation of the multi-axial fatigue lifetime. The experimental part deals with modeling of combined bending - torsion loading and determining the number of cycles to fracture in region low-cycle fatigue and also during of the loading with the sinusoidal wave form under in phase □ = 0°. Based on the experimental results the fatigue design curves are compared to fatigue data from base metal

Fatigue failure is an extremely complex physical process which is governed by a great number of parameters related to, for example, local geometry and material properties of the structural region surrounding the crack growth path. It is commonly recognized that it is impossible for a physical model to account for all fatigue influencing parameters, thus a lot of approximate models have been conceived for practical fatigue assessments. In every stadium of fatigue cumulative damage dominates a definite mechanism controlled by more or less known and verified rules. There exists the stage of micro-plastic process in total volume of material with following stage of fatigue crack nucleation and stage of their growing with more or less detailed zoning. Despite of this research no results have been achieved, which could be considered as successful ones. This applies mainly to the cases of random and combined stress, where today's procedures used in one axis stress analysis fails. There are different approaches and methods which can be used in fatigue life predictions. [2]

Fatigue under combined loading is a complex problem. A rational approach might be considered again for fatigue crack nucleation at the material surface. The state of stress at the surface is two-dimensional because the third principal stress perpendicular to the material surface is zero. Another relatively simple combination of different loads is offered by an axle loaded under combined bending and torsion. This loading combination was tested in our and also in many others experiments. In spite of this fact, fatigue mechanisms are still not fully understood. This is partly due to the complex geometrical shapes and also complex loadings of engineering components and structures which result in multi-axial cyclic stress-strain states rather than uni -axial. [2]

3.fatigue performance evaluation and comparisons of forged steel and ductile cast iron crankshafts

Zoroufi and Fatemi (2005)

An extensive literature review on crankshafts was performed by ZoroufiandFatemi (2005). Their study presents a literature survey focused on fatigue performance evaluation and comparisons of forged steel and ductile cast iron crankshafts. In their study, crankshaft specifications, operation conditions, and various failure sources are discussed. Their survey included a review of the effect of influential parameters such as residual stress on fatigue behavior and methods of inducing compressive residual stress in crankshafts. The common crankshaft material and manufacturing process technologies inuse were compared with regards to their durability performance. This was followed by a discussion of durability assessment procedures used for crankshafts, as well as bench testing and experimental techniques. In their literature review, geometry optimization of crankshafts, cost analysis and potential cost saving opportunitiesare also briefly

Specifications of Diesel Engine

No of cylinders	6
Bore/Stroke	86 mm/ 68 mm
Compression Ratio	18 : 1
Max. Power	8.1 HP @ 3600rpm
Max. Torque	16.7 Nm@ 2200rpm
Maximum Gas pressure	25 Bar

III. DESIGN OF CRANKSHAFT

When the crank is at dead centre

1. Force on the Piston Fp = Area of the bore x Max.Combustion pressure =¶/4x D2x P max
   =14.522 K N
2. Horizontal Reactions at bearings (1&2) due to tangential force is given by,

   H1=H2 = (Fpxb1)/b=7.26 KN

3. Similarly, Vertical Reactions at bearings (2& 3) due piston gas load is given by,

   V2=V3 = (WxC2)/C=10 K N

Design of Crankpin

Let dc = Diameter of crankpin in mm

Lc= Length of crankpin in mm

σb = allowable bending stress for the crankpin.It may be assume as 75 MPa

We know that the bending moment at the center of the crankpin,

$Mc=H_1 .b_2=624.36KN.mm$

Mc = =¶/32(dc)3σb
Dc=44 mm
Length of the crankpin
lc=Fp/(dc.pb)=33 mm

Design of Left hand crank web :

Thickness of the crank web ,
t = 0.65dc +6.35 =35 mm
width of the crank web ,
w = 1.125dc +12.7=65 mm
Max. Bending Moment on the crank web ,
M= $H_1(b_2$-lc/2-t/2)=377.52 KN MM
Bending stress ,
σb = M/Z=28.44 N/mm2
direct compressive stress,
σc = H_1/w.t= 3.19 N/mm2
Total stress on the crank web=σc +σb =31.63N/mm2

Design of shaft under flywheel :
Let ds = Diameter of shaft in mm
Length of main bearing are equal
L1=L2=L3=2(B/2-LC/2-t)=70 mm
Bending moment due to weight of flywheel ,
Mw=V3 X C1 =850 $X10^3$N**mm**
Bending moment due to belt pull,
M_T= H3' X C1 =85 $X10^3$N**mm**
Bending moment on the shaft,
M s=√(Mw^2+M_T^2
M s =π/32x(d s) ^{3} xσb
Ds=60 mm

B] When the Crank Is At An Angle Of Maximum Twisting Moment

1. Force on the Piston F p = Area of the bore x Max.Combustion pressure =¶/4x D2x P max
= 5808.8 N

In order to find the thrust in the connecting rod (F_Q), we should first find out the angle of inclination of the connecting rod with the line of stroke (i.e. angle Ø).
We know that Sin Ø = SinΘ/(L/R)
Ø=6.58 º

2.Thrust in the connecting rod F_Q = F_P/cosØ=5847.3N

Thrust on the crank shaft can be split into Tangential component and the radial component.
a) Tangential force on the crank shaft, FS = FQ sin(Θ+ Ø)=3880.45 N
b) Radial force on the crank shaft, FR = FQ cos (Θ+ Ø)=4373.7N

3.Reactions at bearings (1&2) due to tangential force is given by,

H_T1=H_T2 = (FTxb1)/b=1940.22N

4. Similarly, Reactions at bearings (a & b) due to radial force is given by,

H_R1 = H_R2 = ($F_R$xb1)/b=2186.85 N

Design of Crankpin

Let dc = Diameter of crankpin in mm
We know that the bending moment at the center of the crankpin,
Mc = H_R1 x b2=188069.1 Nmm
Twisting moment on the crankpin,
Te= √(M_C2 + T_C2)=199303.02 Nmm

Equivalent twisting moment (Te)
Te = π/16x(d c) 3 x Ʊ
dc=30.72 mm
Twisting moment on shaft ,Ts =F_T x r=131935.3 N mm
Equivalent Torque Te =√(Ms2 + Ts2)=864368.49Nmm
Te = π/16x(d c) 3 xƱ
Ʊ =20.38N mm2
.:This value is less than allowable shear stress 35 MPa
Hence Dia 60 mm is valid
B.M. at junction
Ms1=R1(b2+lc/2+t/2)-F_Q(lc/2+t/2) =152009.4
Ts1 = F_T X r=13193.53 N mm
Te =√(Ms1 + Ts1)=152580.88Nmm
Ds1=26.44mm
Design of right hand crank web:
MR=(σb)r X Z ,
(σb)r=8.56 N/mm2
MT=(σb)TX Z , (σb)T =3.27 N/mm2
Direct compressive stressσd =FR/2wt=0.96 N/mm2
Total compressive stress, σc = (σb)R + (σb)T+(σd) =12.79 96 N/mm2
Twisting moment on arm
MT = HT2 (b1 - lc/2) =132905.07 N/mm
Ʊ = T/Zp =T / Zp = 7.51 N/mm2
Max combine stress
(σc)max=σc/2 + ½√(=√σc2 + 4Ʊ2)
=16.26 Nmm

IV.RESULTS

Diameter of crankpin =44 mm
Length of the Cran pin =33 mm
Diameter of shaft =60 mm
Web Thickness (Left & Right Hand)= 35mm
Web Width (Left & Right Hand)=65 mm

V. METHODOLOGY

Procedure of static analysis
First I have prepared assembly in solid works for crankshaft & save as IGES for exporting into ABACUS.

importIGESModel in ABACUS Workbench for simulation module

1.Apply material for crankshaft

Material detail:C-70 Alloy Steel
Material Type – Forge steel
Yeild strength (MPa) –483
Ultimate Tensile strength (MPa) –621
Elongation (%) – 13
Poisson ratio -0.30

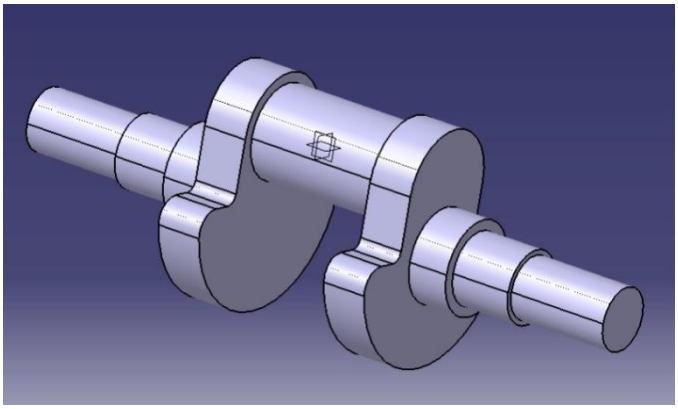

Figure1 : Crankshaft in ABAQUS

2. Mesh the crankshaft:

Types of Element: Tetrahedron

No of element : 17119

No of Nodes: 9605

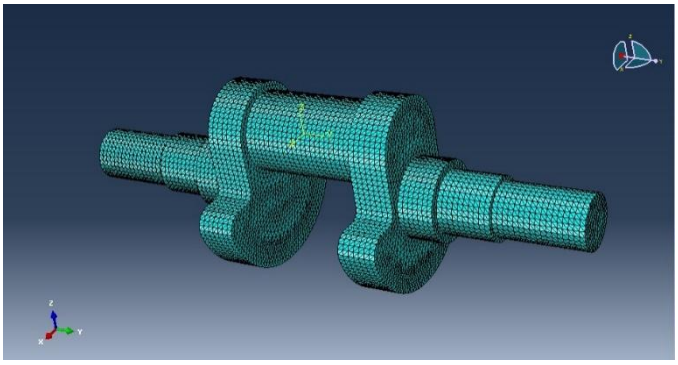

Figure 2 : Mesh model of the crankshaft

3. Defined B. C. –

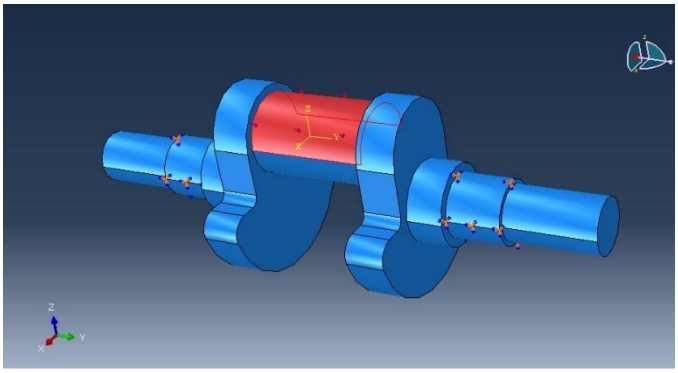

Figure 3: Apply the boundary condition

4. Run the analysis
5. Get the reult
6. Output of the analysis

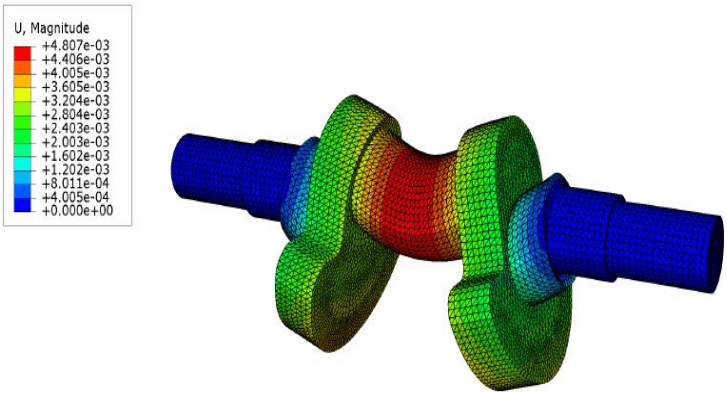

Figure 4 : Deformation of Crankshaft

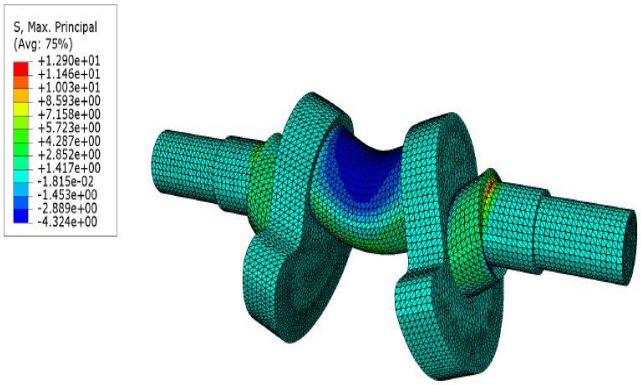

Figure 5: Maximum Principle stress

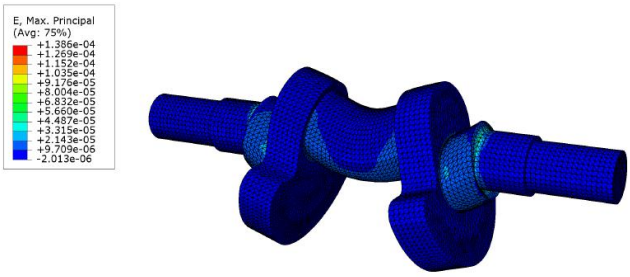

Figure 6: Maximum Principle strain

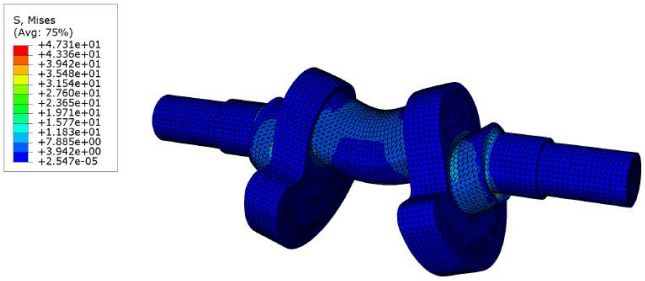

Figure 7: Maximum VoinMise stress

VI.CONCLUSION

Finite Element analysis of the six cylinder crankshaft has been done using FEA tool ABAQUS. From the results obtained from FE analysis, many discussions have been made.

1. Results show the improvement in the strength of the crankshaft as the maximum limits of stresses. The value of von-misses stresses that comes out from the analysis is less than material yield stress so our design is safe.
2. The weight of the crankshaft will be reduced from Design 1-Original to Design 1-Modified. Thereby, reduces the inertia force.
3. As the weight of the crankshaft is decreased this will decrease the cost of the crankshaft and increase the engine performance
4. Above Results shows that FEA results conformal matches with the theoretical calculation so we can say that FEA is a good tool to reduce the time consuming theoretical work
5.Material C-70 Alloy steel is meeting the maximum no of requirements.
6.Though it is not confirming the minimum available deformation, the difference between the minimum deformation available and the deformation when C70 alloy is used, is 0.05 Microns which is too less & can be ignored,
7.C70 alloy steel will give optimum results as compared to the other materials

ACKNOWLEDGEMENT

First and foremost, I would like to express my deep sense of gratitude and indebtedness to mysupervisorMr. P.N.NarwadeProfessor, Mechanical Engineering Department for his invaluable encouragement,suggestions and support from an early stage of this project stage one report and providing me extraordinary experiences throughout the work. Above all, his priceless and meticulous supervision at each and every phase of workinspired me in innumerable ways.

I specially acknowledge him for his advice, supervision, and the vital contribution as and when requiredduring this project stage one. His involvement with originality has triggered and nourished my intellectual maturity thatwill help me for a long time to come. I am proud to record that I had the opportunity to work with anexceptionally experienced Professor like him.

I am highly grateful to Prof R.N.Navtar, PG Co-ordinatorP.DV.V.P college of Engineering,Ahmednagar for theirkindsupport and permission to use the facilities available in the Institute.

REFRENCES

[1] Evaluation of FEM based fracture mechanics technique to estimate life of an automotive forged steel crankshaft of a single cylinder diesel engine Rajesh M.Metkar, VivekK. Sunnapwar, SubhashDeoHiwase, VidyaSagarAnki,MahendraDumpa, Proscenia Engineering 51 (2013) 567 – 572

[2] Modeling and Experimental Analysis of the Aluminum Alloy Fatigue Damage in the case of Bending – Torsion Loading Milan Sága, Peter Kopas, Milan Uhríík, Proscenia Engineering 48 (2012) 599 – 606

[3] A comparison of cycling SRM crank and strain gauge instrumented pedal measures of peak torque, crank angle at peak torque and power output Rodrigo R. Bini, Patria A. Hume, Andre Cerviri, Proscenia Engineering 13 (2011) 56–61

[4] An efficient approach for trimming simulation of 3D forged components. Lu , H. Ou, International Journal of Mechanical Sciences 55 (2012) 30–41

[5] Development of CAD Software for Shaft under various Loading ConditionsA.A. Adekunle, S. B. Adejuyigbeand O.T. Arulogun,Procedia Engineering 38 (2012) 1962 – 1983

[6] Failure Analysis of a Two High Gearbox Shaft CharnontMoolwan, SamroengNetpu, Procedia - Social and Behavioral Sciences 88 (2013) 154 – 163

[7] http://www.deere.com/, (accessed November, 2005).

[8] http://www.engineersedge.com/, (accessed April, 2007).

[9] http://www.forging.org/, (accessed April, 2007).

[10] http://www.jobshop.com/, (accessed April, 2007)

[11] http://www.makinamuhendisi.com/, (accessed April, 2007)

[12] .Model of curvature of crankshaft blank during the heat treatment after forgingAndrzejMilenina, Tomasz Reca, WojciechWalczykb, MaciejPietrzyka,Procedia Engineering 81 (2014) 498 – 503

[13] Research on the Effect of Residual Stress to the Measurement of Shaft Power Li Qina,b, XincongZhoua, Kun Yana, Zhixiong Lie, EngaoPengProcedia Engineering 15 (2011) 4321 – 432

[14] A. Solanki, K. Tamboli,M.J, M.J, M.J, M.J. Zinjuwadia, (2011), “Crankshaft Design and Optimization- A Review” National Conference on Recent Trends in Engineering & Technology.

[15] J. Meng, Y. Liu, R. Liu, (2011), “Finite Element analysis of 4-Cylinder Diesel Crankshaft” I.J. Image, Graphics and Signal Processing, vol 5, pp. 22-29

